NPTEL ONLINE CERTIFICATION COURSES

Digital Electronic Circuits

Goutam Saha

Indian Institute of Technology Kharagpur

Introduction

Lecture 01

NPTEL

CONCEPTS COVERED

Concepts Covered:

- Why 'Digital' and what is 'Digital'?
- Manipulation of digital signal
- Switching and logic operation
- Diode as a switch

NPTEL

Why Digital?

- Popular terms of current times:

  - Digital Clock, Digital Camera, Digital Money, Digital Media, …

- Prefix ‘Digital’ associates a term with digital technology.

- Digital technology is considered more efficient for reasons such as:

  - Easy to store, copy, compress
  - Various transmission options
  - Flexibility in processing
  - Inexpensive building block
  - Immunity: noise, interference
  - Error correction, encryption
  - Analysis of data

NPTEL

What is Digital?

- Digital signals represent only finite number of discreet values (2 valued: Binary).
  - Signal is discreet by nature - Signal, analog by nature, converted to discreet

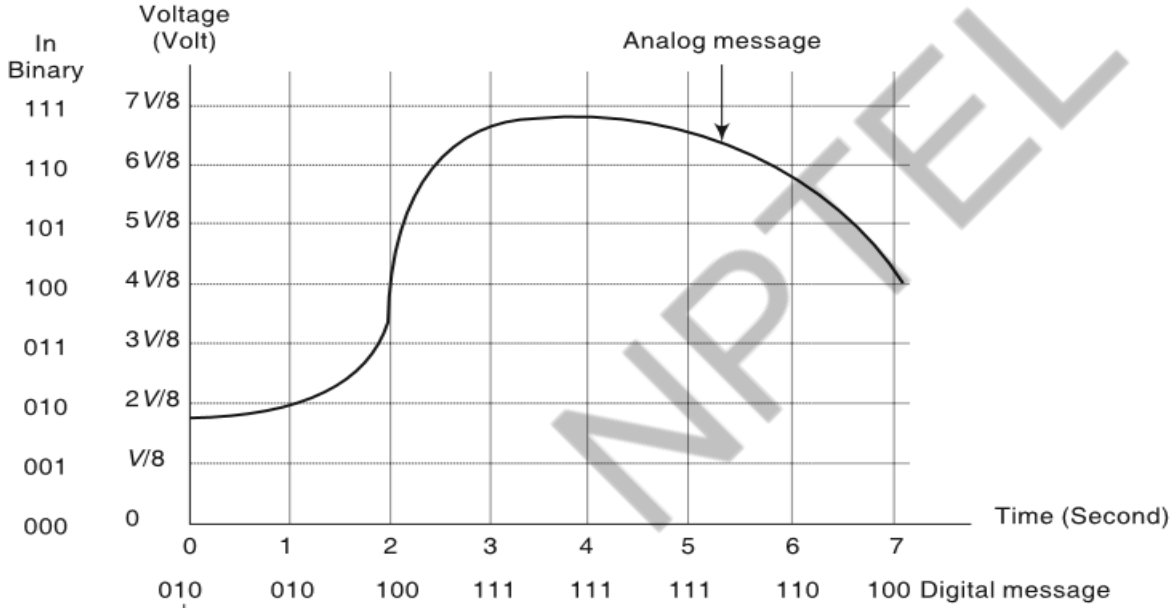

- Digital systems represent and manipulate digital signals.

NPTEL

Manipulation of Digital Signals

- Switching is key to manipulation of digital signals.
- Digital data storage involves switching.

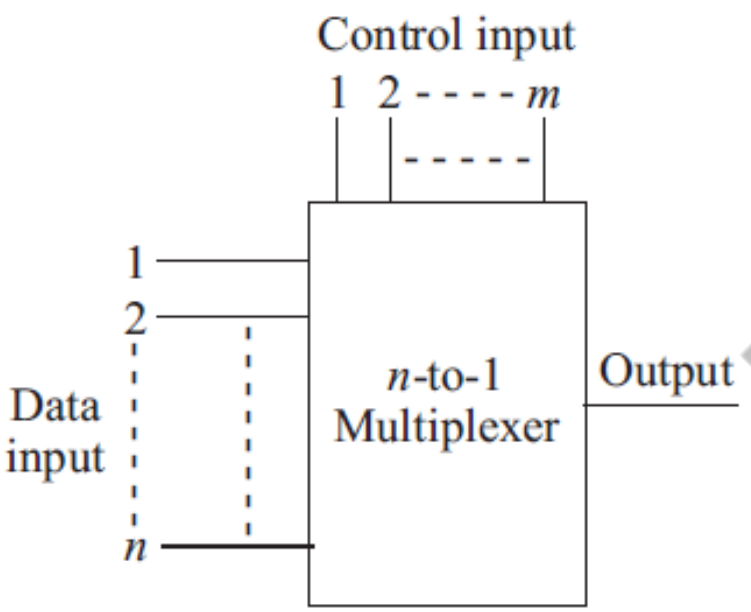

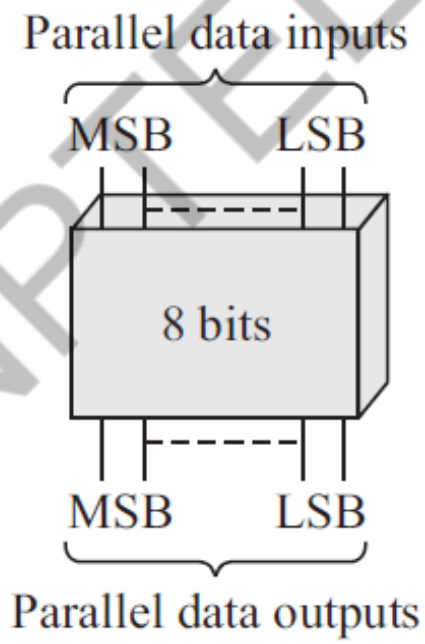

NPTEL

Switching & Logic Operation

Realization of AND

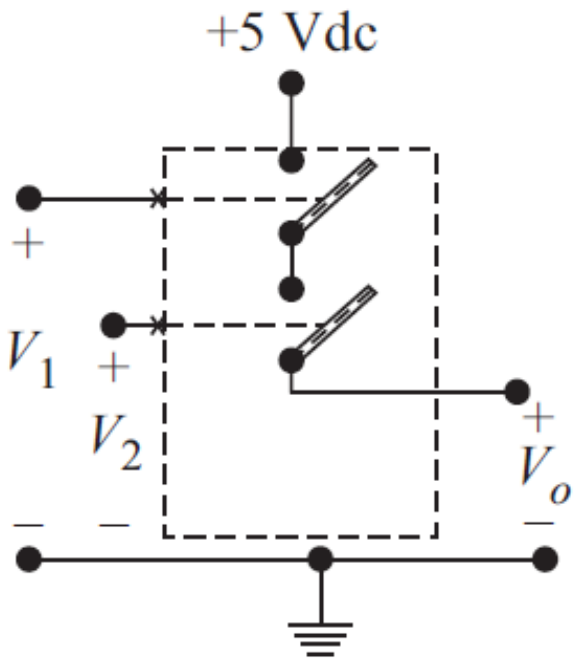

V_1	V_2	V_o
L	L	L
H	L	L
L	H	L
H	H	H

NPTEL

Switching & Logic Operation

Realization of OR

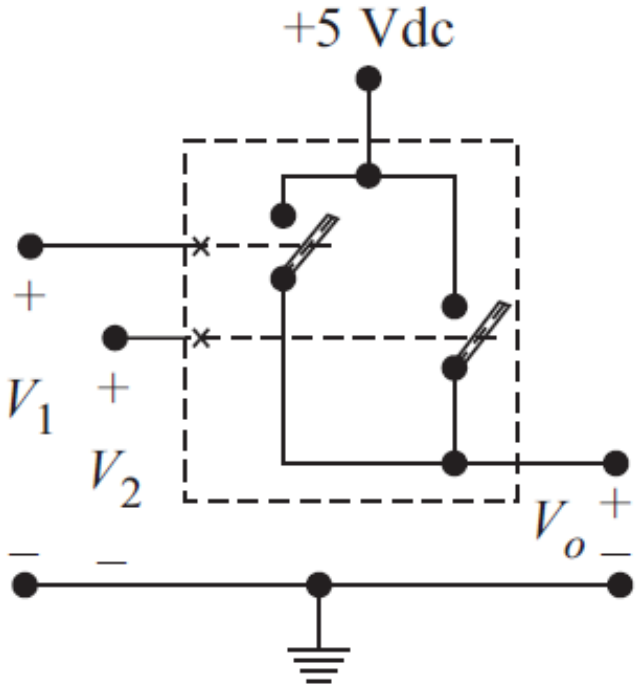

V_1	V_2	V_o
L	L	L
H	L	H
L	H	H
H	H	H

NPTEL

Switching & Logic Operation

Realization of NOT

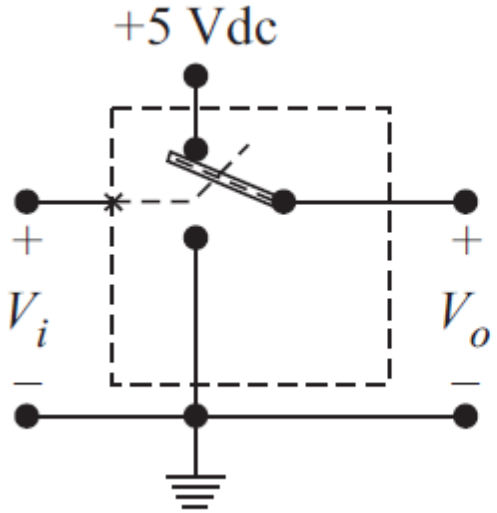

V_i	V_o
L	H
H	L

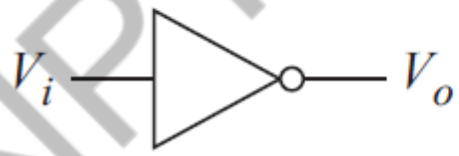

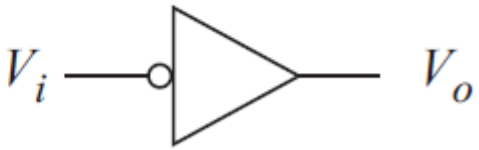

NPTEL

Switching Circuits

Realization of Tristate

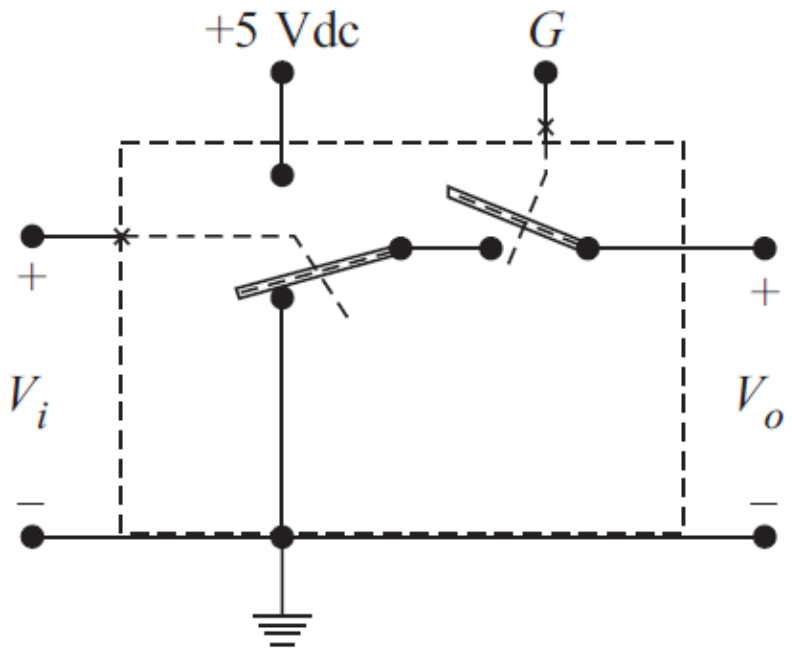

V_i	G	V_o
L	L	Open
H	L	Open
L	H	L
H	H	H

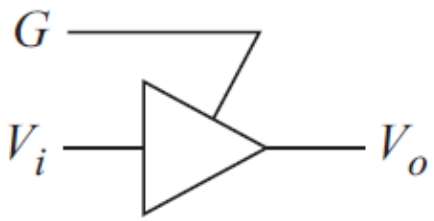

NPTEL

Diode as a switch

- **Realization of AND, OR logic**

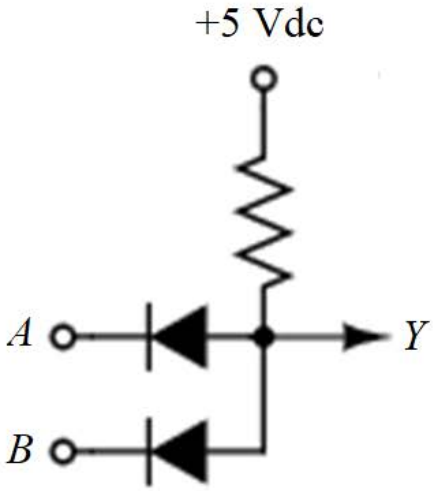

A	B	Y
0	0	0
0	1	0
1	0	0
1	1	1

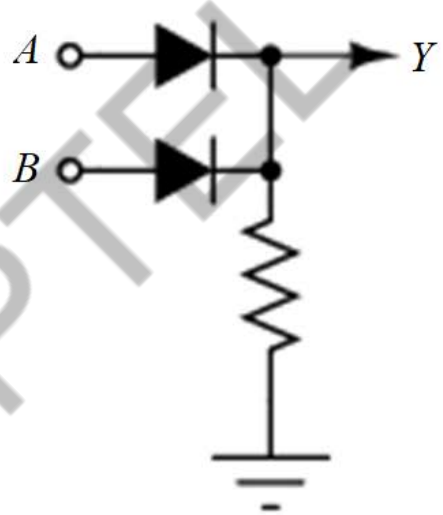

A	B	Y
0	0	0
0	1	1
1	0	1
1	1	1

NPTEL

- **Possibility of realizing NOT logic**

References

References:

- Donald P. Leach, Albert P. Malvino, and Goutam Saha, Digital Principles & Applications 8e, McGraw Hill
- M. Morris Mano, and Michael D. Ciletti, Digital Design 5e, Pearson
- Herbert Taub, Donald L Schilling, and Goutam Saha, Principles of Communication Systems 4e, McGraw Hill

NPTEL

Conclusion

Conclusion:

- Digital technology provide better performance at a lower cost. The key to it is inexpensive building blocks i.e. digital electronic circuits.
- Digital systems represent and manipulate digital signals. Digital signals are represented by finite number of discreet values.
- Manipulation of digital signal involves switching. Switching is associated with logic operations like AND, OR, NOT.
- Diode as a switch can provide AND and OR logic.

NPTEL

FREE ONLINE EDUCATION

swayam

शिक्षित भारत, उन्नत भारत

NPTEL ONLINE CERTIFICATION COURSES

Thank you!

NPTEL

NPTEL ONLINE CERTIFICATION COURSES

Digital Electronic Circuits

Goutam Saha

Indian Institute of Technology Kharagpur

Transistor as a switch

Lecture 02

NPTEL

CONCEPTS COVERED

Concepts Covered:

- Transistor as an inverter
- Input-output characteristics
- Noise margin, transition width, logic swing
- Fanout

NPTEL

Transistor as a switch

Realization of NOT gate (inverter), Input-Output Characteristics

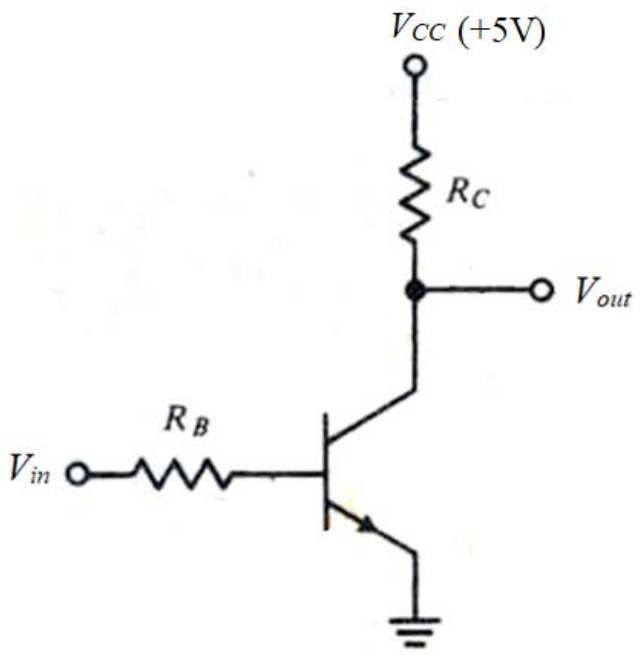

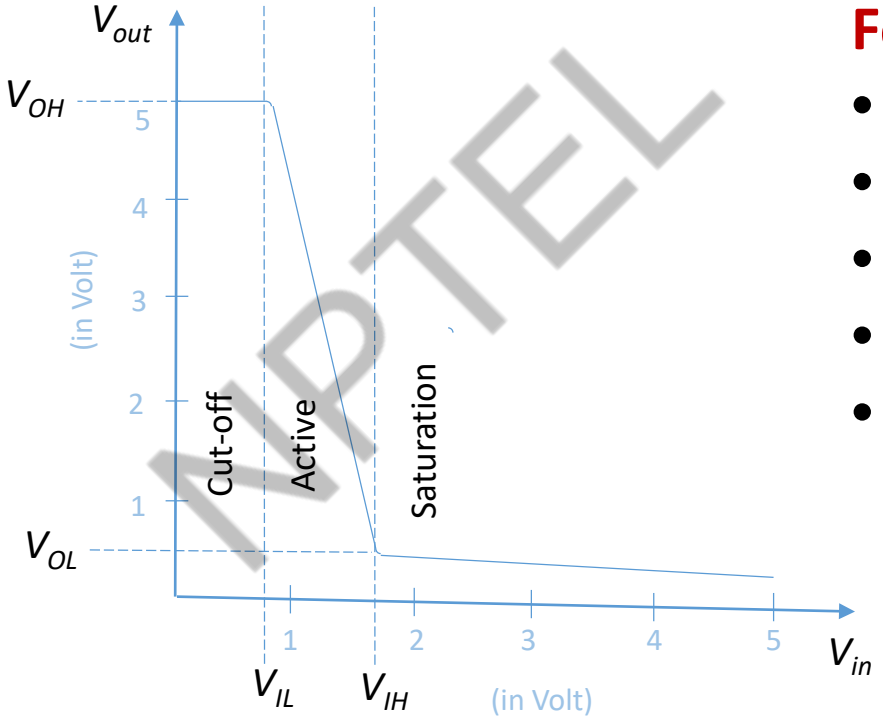

For quantitative analysis:

- $R_B = 10\ k\Omega$
- $R_C = 1\ k\Omega$
- $\beta_F = 50$
- $V_{BE(ON)} = V_{BE(Sat)} = 0.7V$
- $V_{CE(Sat)} = 0.2V$

NPTEL

Transistor as a switch

Cut-off region

- Base current $I_B = 0$ till $V_{BE} < 0.7V$ i.e. $V_{in} < 0.7V$.
- Transistor is *cut off* and $I_C = 0$ with $V_{out} = 5V$ over entire range.
- When V_{in} is increased beyond 0.7V, base current begins to flow and the transistor moves from *cut off* region to *normal active* region.
- The coordinate, $V_{in} = 0.7V$, $V_{out} = 5V$ mark first transition point in the transfer function of this circuit. This is also termed as *breakpoint* or *edge of cutoff* (EOC).

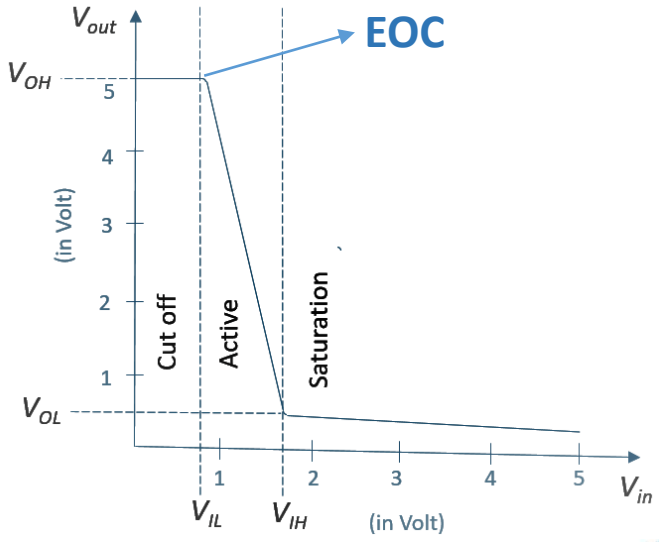

NPTEL

Transistor as a switch

Active region

- Applying KVL along V_{in}, R_B, V_{BE}, Ground
  $I_B = (V_{in} - V_{BE(on)})/R_B$
- In active region, $I_C = \beta_F I_B$ (as long as $V_{CE} < V_{CE(sat)}$)
- Applying KVL along V_{cc}, R_C, V_{CE}, Ground
  $V_{out} = V_{CC} - I_C R_C = V_{CC} - \beta_F I_B R_C$
- Combining,
  $V_{out} = V_{CC} - \beta_F R_C (V_{in} - V_{BE(on)})/R_B$

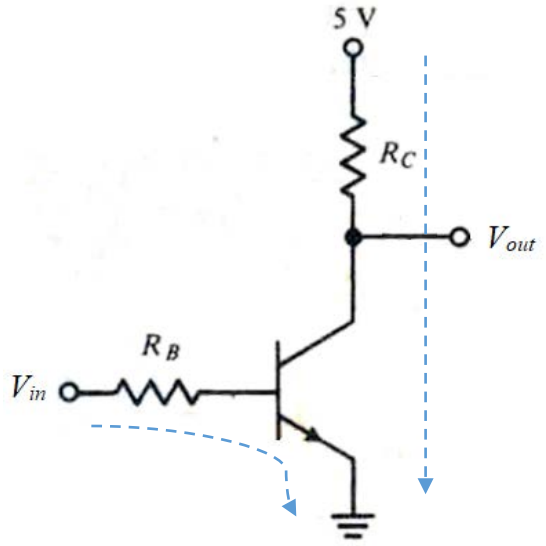

NPTEL

Transistor as a switch

Saturation region

- As V_{in} (or I_B) is increased a second transition point is reached when $V_{out} = V_{CE(sat)}$.

- The values of I_C and I_B for this condition (the subscript EOS means *edge of saturation*):

  $I_{C(EOS)} = (V_{CC} - V_{CE(sat)})/R_C = (5-0.2)/1 = 4.8mA$

  and $I_{B(EOS)} = I_{C(EOS)}/\beta_F = 4.8/50 = 0.096mA$

  Then $V_{in(EOS)} = V_{BE(on)} + I_{B(EOS)} R_B = 0.7 + (0.096)(10) = 1.66V$

- Thus $V_{in} \geq 1.66V$ the transistor saturates. (Saturating Logic)

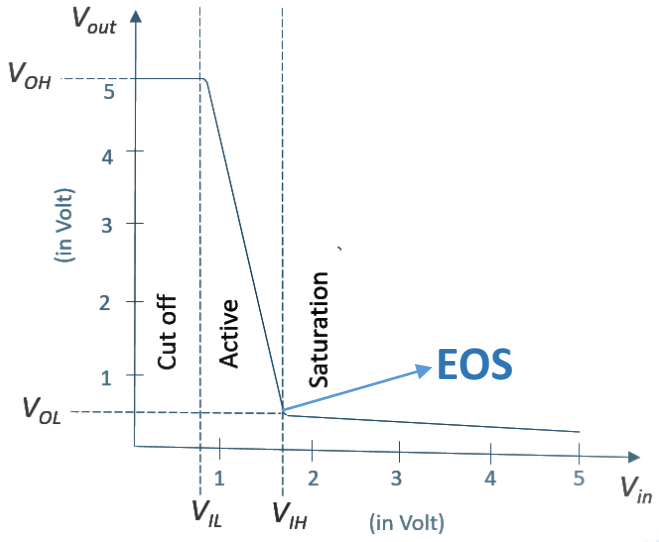

NPTEL

Input-Output Mapping

Noise Margin, Transition width and Logic swing

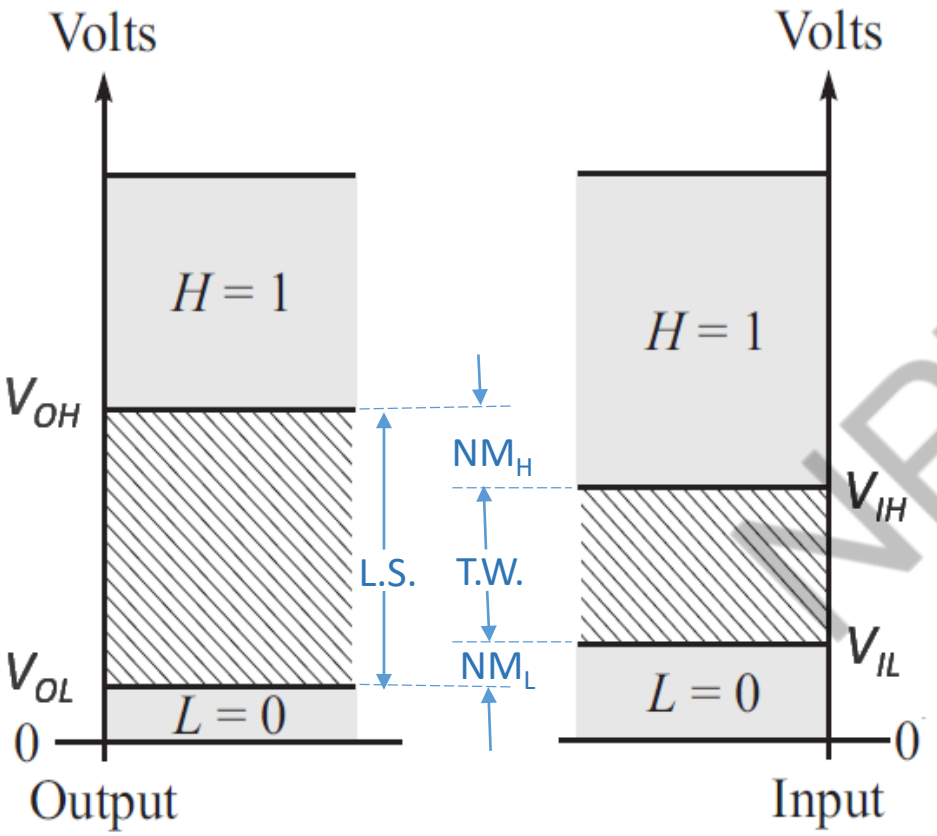

$NM_L = V_{IL} - V_{OL} = 0.7 - 0.2 = 0.5V$

$NM_H = V_{OH} - V_{IH} = 5.0 - 1.66 = 3.34V$

Transition width = $V_{IH} - V_{IL}$
$= 1.66 - 0.7 = 0.96V$

Logic swing = $V_{OH} - V_{OL}$
$= 5 - 0.2 = 4.8V$

NPTEL

Fanout

Input to driver transistor: HIGH

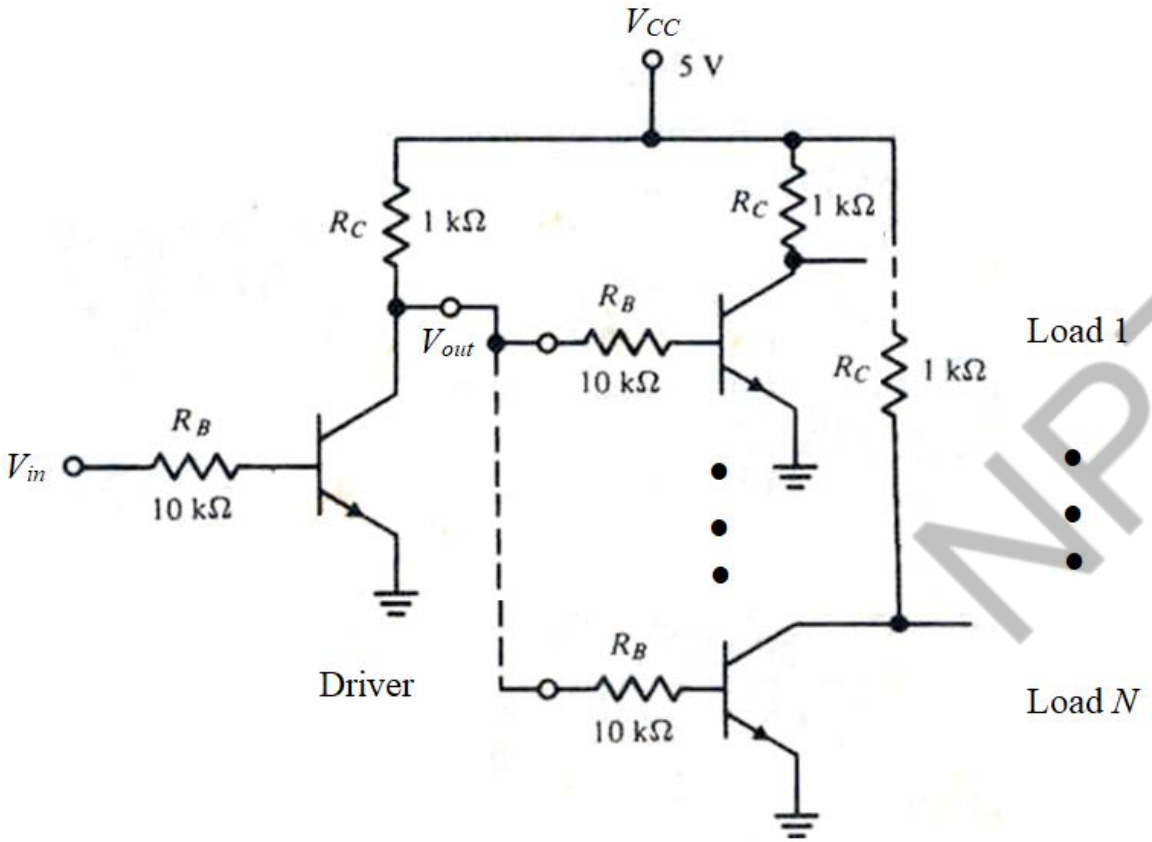

- When V_{in} is HIGH, driver transistor is saturated and V_{out} will be LOW.
- With $V_{CE(sat)}$ = 0.2V all the load gates will be in the OFF state.
- No restriction on number of load gates

NPTEL

Fanout

Input to driver transistor: LOW

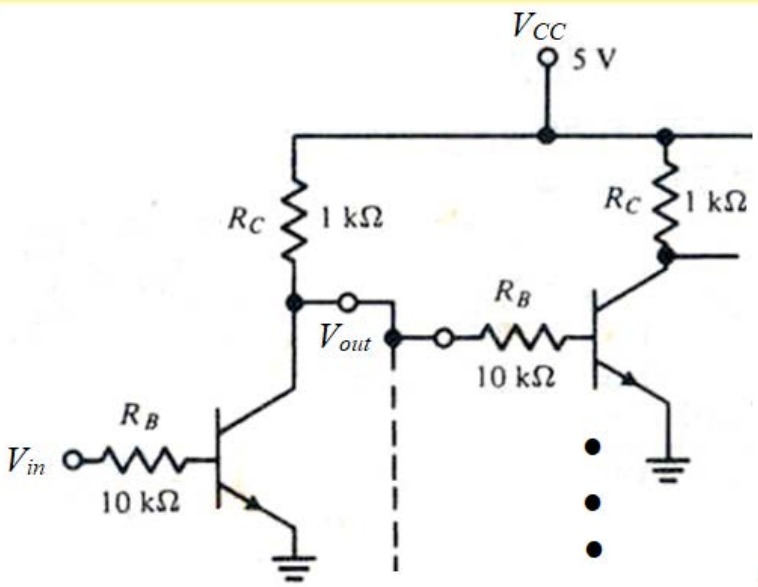

- When V_{in} is LOW, driver transistor will be OFF and V_{out} will be at HIGH level.
- A limit in the fanout is set when the voltage at V_{out} is insufficient to saturate load gate transistors.

- Note that V_{IH} = 1.66V
- For driver, $I_{C(driver)} = (V_{CC} - V_{out})/R_C = (5 - 1.66)/1 = 3.34$ mA
- For load, $I_{B(load)} = (V_{out} - V_{BE(sat)})/R_B$

$$= (1.66 - 0.7)/10 = 0.096 \text{ mA}$$

$$N = I_{C(driver)}/I_{B(load)} = 34.79 \rightarrow 34$$

NPTEL

Fanout

Effect of noise margin

- For a 0.5V noise margin,

  Minimum HIGH level voltage at V_{out}

  $V_{OH} = V_{IH} + NM_H = 1.66 + 0.5 = 2.16V$

- Similar calculation as before with V_{out} at 2.16V gives

  $I_{C(driver)} = (V_{CC} - V_{out})/R_C = (5 - 2.16)/1 = 2.84$ mA

  $I_{B(load)} = (V_{out} - V_{BE(sat)})/R_B = (2.16 - 0.7)/10 = 0.15$ mA

  $N = I_{C(driver)}/I_{B(load)} = 19.4 \rightarrow 19$

- An increased NM_H reduces fanout even further

Other factors:

Variation in β_F, $V_{BE(sat)}$, $V_{CE(sat)}$, V_{CC}, R_C, R_B.

NPTEL

References

References:

- Grinich, V.H., and H.G. Jackson, Introduction to Integrated Circuits, McGraw-Hill
- Donald P. Leach, Albert P. Malvino and Goutam Saha, Digital Principles & Applications 8e, McGraw Hill
- Herbert Taub, and Donald Schilling, Digital Integrated Electronics, McGraw Hill

NPTEL

Conclusion

Conclusion:

- A transistor can be used as a switch to realize an inverter or NOT logic.
- The cut-off and saturation are two stable states of the transistor when operated as a switch.
- The input-output characteristics define key parameters of a logic circuit such as, noise margin, transition width, logic swing.
- A logic gate connects to many similar gates to form a large complex circuit. Fanout is an important parameter in this context.

NPTEL

FREE ONLINE EDUCATION

swayam

शिक्षित भारत, उन्नत भारत

NPTEL ONLINE CERTIFICATION COURSES

Thank you!

NPTEL

NPTEL ONLINE CERTIFICATION COURSES

Digital Electronic Circuits

Goutam Saha

Indian Institute of Technology Kharagpur

Performance Issues and Introduction to TTL

Lecture 03

NPTEL

CONCEPTS COVERED

Concepts Covered:

- Propagation delay and power dissipation
- RTL NOR and NAND gate
- DTL NAND gate
- TTL NAND gate

NPTEL

Propagation Delay

- Due to finite switching speed of transistors and circuit capacitances

input

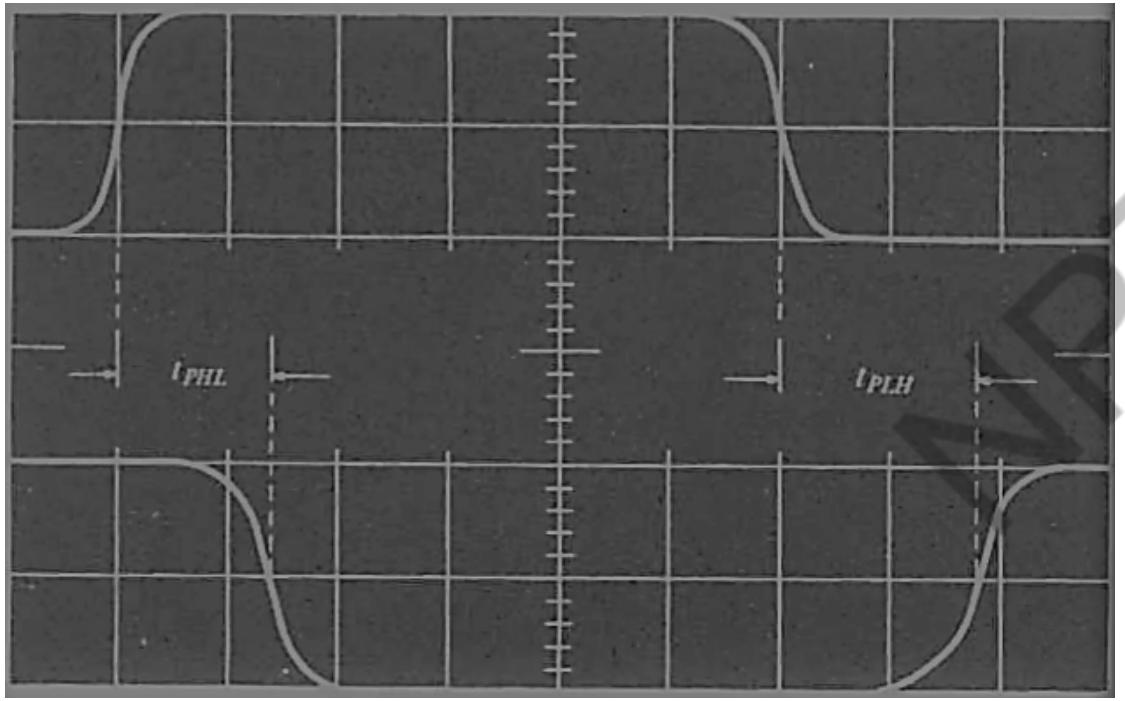

output

t_{PHL}: Delay in changing output from H to L
t_{PLH}: Delay in changing output from L to H

Propagation delay, $t_{PD} = (t_{PHL} + t_{PLH})/2$

t_r: Rise time → 10% to 90% of max.
t_f: Fall time → 90% to 10% …

NPTEL

Power dissipation

- **Static power dissipation**
  - when transistor is either ON or OFF
  - depends on current drawn in each case
  - power dissipation, P_D is average of these two
  - significant in switching of Bipolar Junction Transistor

- **Dynamic power dissipation**
  - when transistor switches
  - depends on switching speed
  - significant in switching of CMOS Transistor

Figure of Merit,

$F = P_D \times t_{PD}$

The lower the F, the better.

NPTEL

RTL NOR Gate

RTL: Resistance Transistor Logic

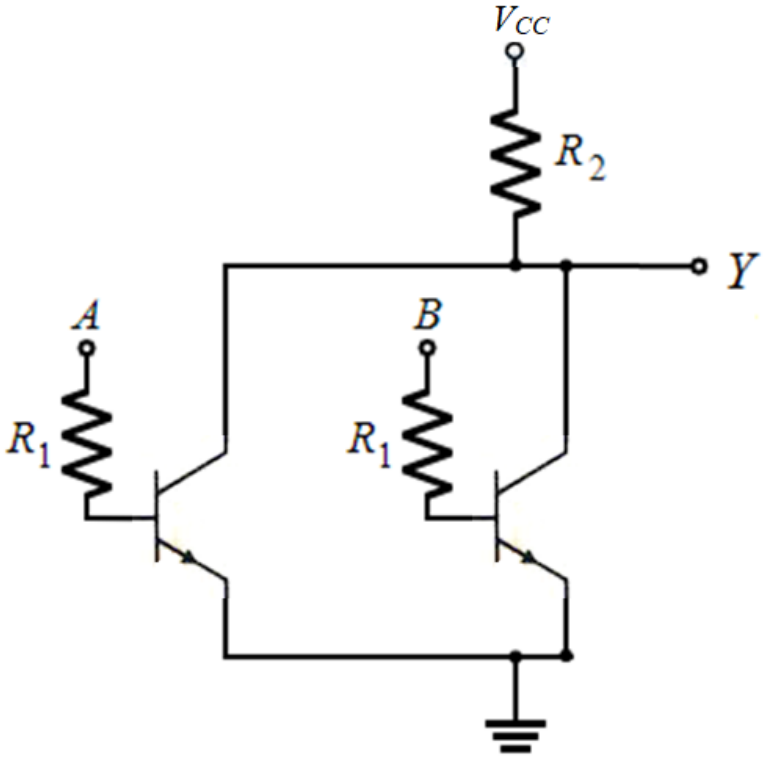

A	B	Y
0	0	1
0	1	0
1	0	0
1	1	0

- For 3 input NOR gate, another input would come in parallel with *A* and *B.*
- More no. of inputs increases delay
- *Fan-in*: Max. number of inputs a gate can handle

NPTEL

RTL NAND Gate

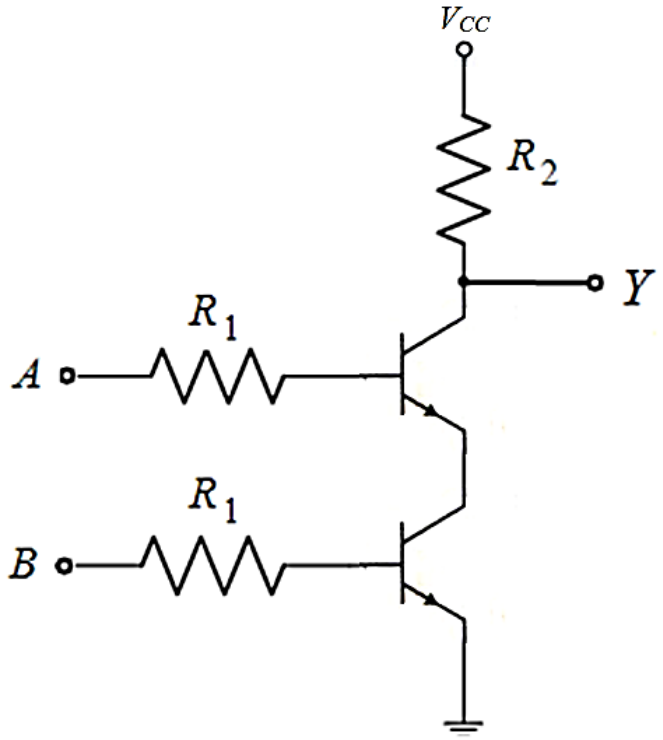

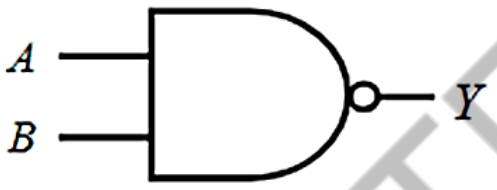

A	B	Y
0	0	1
0	1	1
1	0	1
1	1	0

It will be shown that any other logic gates can be obtained using only NAND gate or NOR gate.

NPTEL

From Archive (Motorola datasheet)

DUAL 3-INPUT GATES

PLASTIC MRTL MC700P/800P series

MC715P • MC815P

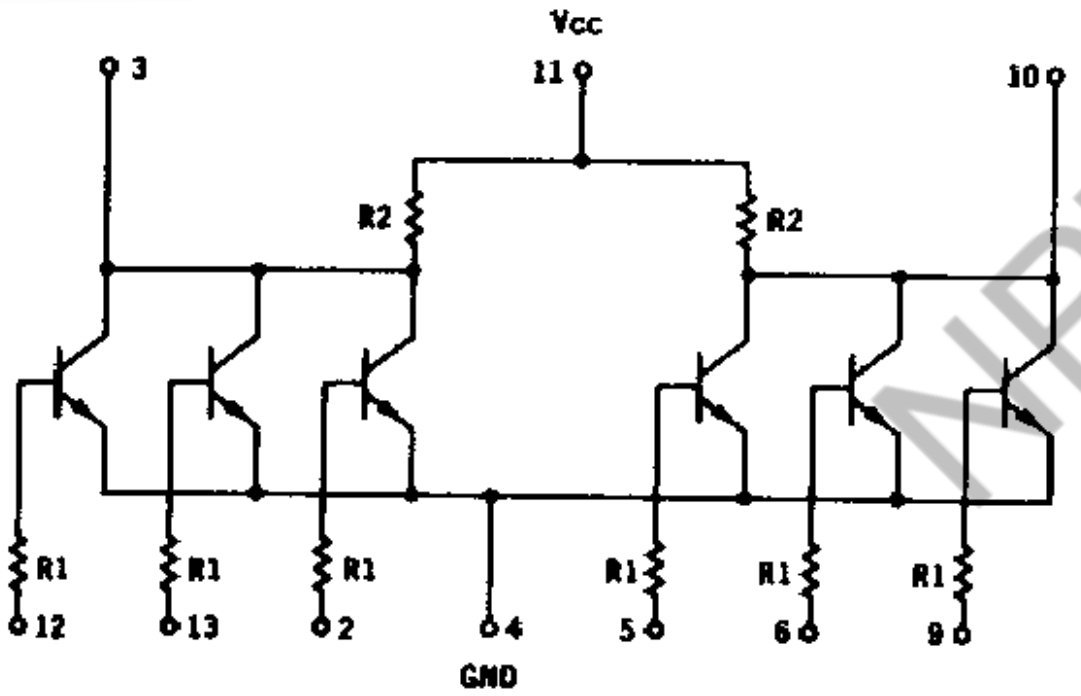

Two 3-input NOR gates

R1 = 450Ω , R2 = 640Ω

P_D = 55 mW (input H), 15 mW (input L)

t_{PD} = 12 ns

The MRTL family of resistor-transistor logic offers the industry's broadest line of digital circuits. Devices in this section are medium-power circuits; low-power mW MRTL circuits are also available.

NPTEL

DTL NAND Gate

DTL: Diode Transistor Logic

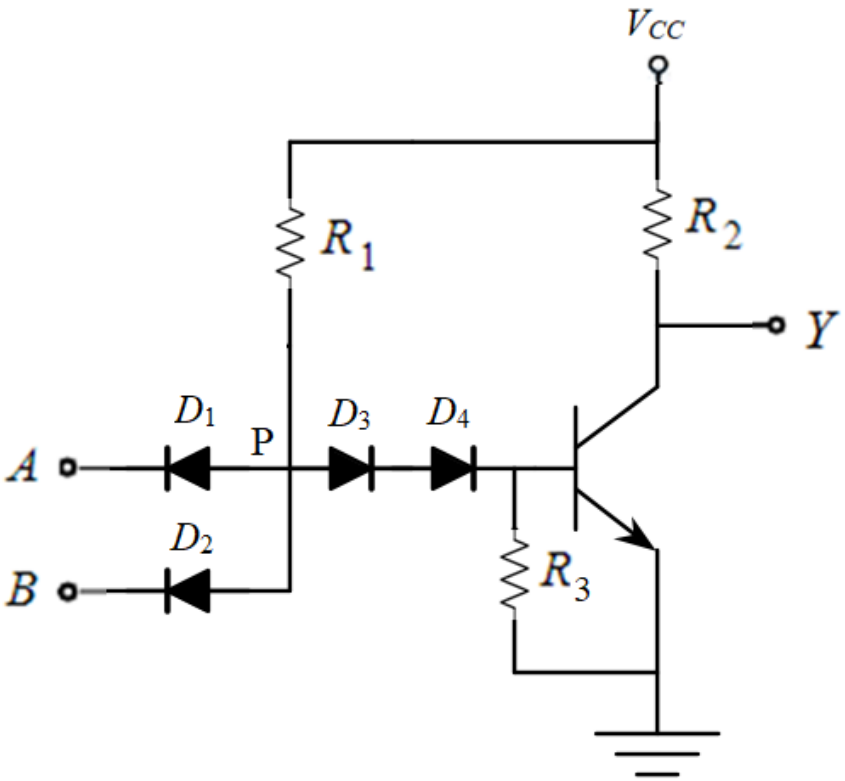

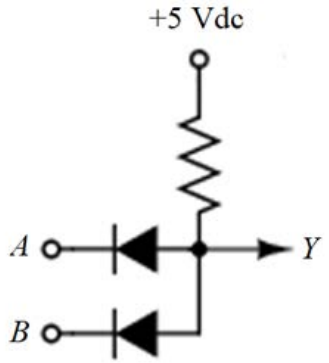

A	B	Y
0	0	0
0	1	0
1	0	0
1	1	1

- D_1, D_2, R_1, V_{CC} : AND logic at P.
- D_3 and D_4 are level shifters (V_P = 3 x 0.7V turns ON transistor.)
- R_3 provides discharge path of stored charge at BE junction that reduces t_{PLH}.
- Any of A or B low (0.2 V), V_P = 0.9 V, insufficient to turn ON the transistor.

NPTEL

TTL: Transistor Transistor Logic

NAND Gate

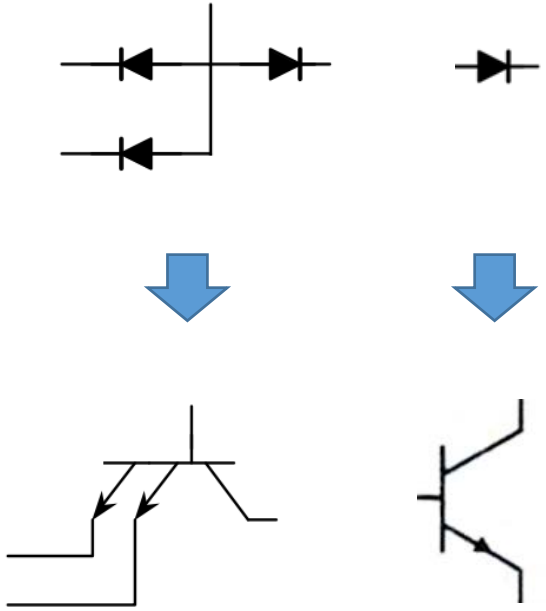

Multi-emitter Transistor

Phase splitter

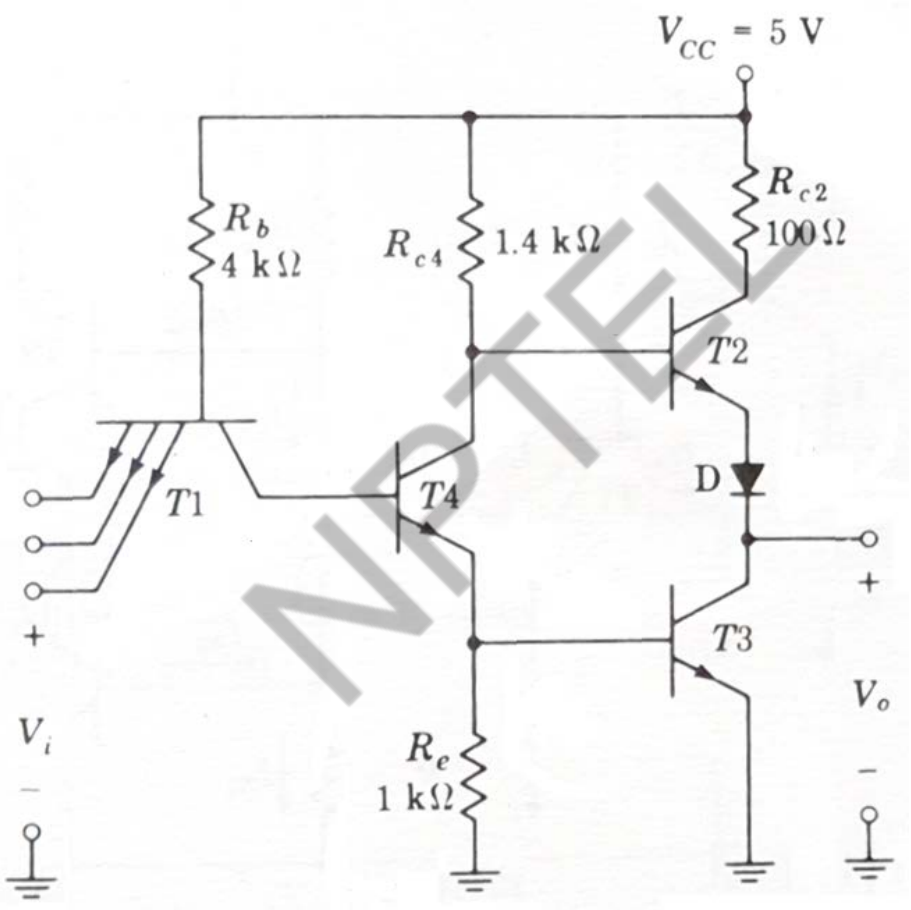

- Totem pole output reduces output resistance when at H.
- R_3 cannot be made zero.
- D_1 to avoid indeterminate output.

References

References:

- Grinich, V.H., and H.G. Jackson, Introduction to Integrated Circuits, McGraw-Hill
- Herbert Taub, and Donald Schilling, Digital Integrated Electronics, McGraw Hill
- Motorla Datasheet accessed on Oct. 08, 2018 from http://willowdaledesign.com/17_MRTL_700P_800P_text.pdf

NPTEL

Conclusion

Conclusion:

- Propagation delay, power dissipation and their product, defined as figure of merit, are important to characterize a logic gate.
- RTL NOR gate is formed of parallel connection of transistors acting as switches akin to NOR logic formed of electrical switches. Similarly, RTL NAND gate is formed of series connection of transistors.
- DTL NAND gate uses diode AND logic, level shifter diode and transistor inverter.
- TTL NAND gate uses transistor at the input stage, for level shifting and phase splitting, and also totempole output to improve switching speed.

NPTEL

FREE ONLINE EDUCATION

swayam

शिक्षित भारत, उन्नत भारत

NPTEL ONLINE CERTIFICATION COURSES

Thank you!

NPTEL

NPTEL ONLINE CERTIFICATION COURSES

Digital Electronic Circuits

Goutam Saha
Indian Institute of Technology Kharagpur

IC 74147: Decimal-to-BCD Priority Encoder

Transistor Transistor Logic (TTL)

Lecture 04

NPTEL

CONCEPTS COVERED

Concepts Covered:

- TTL Transfer Characteristics and operating parameters
- TTL Open Collector configuration
- TTL Tristate
- Schottky TTL

NPTEL

TTL: Transfer Characteristics

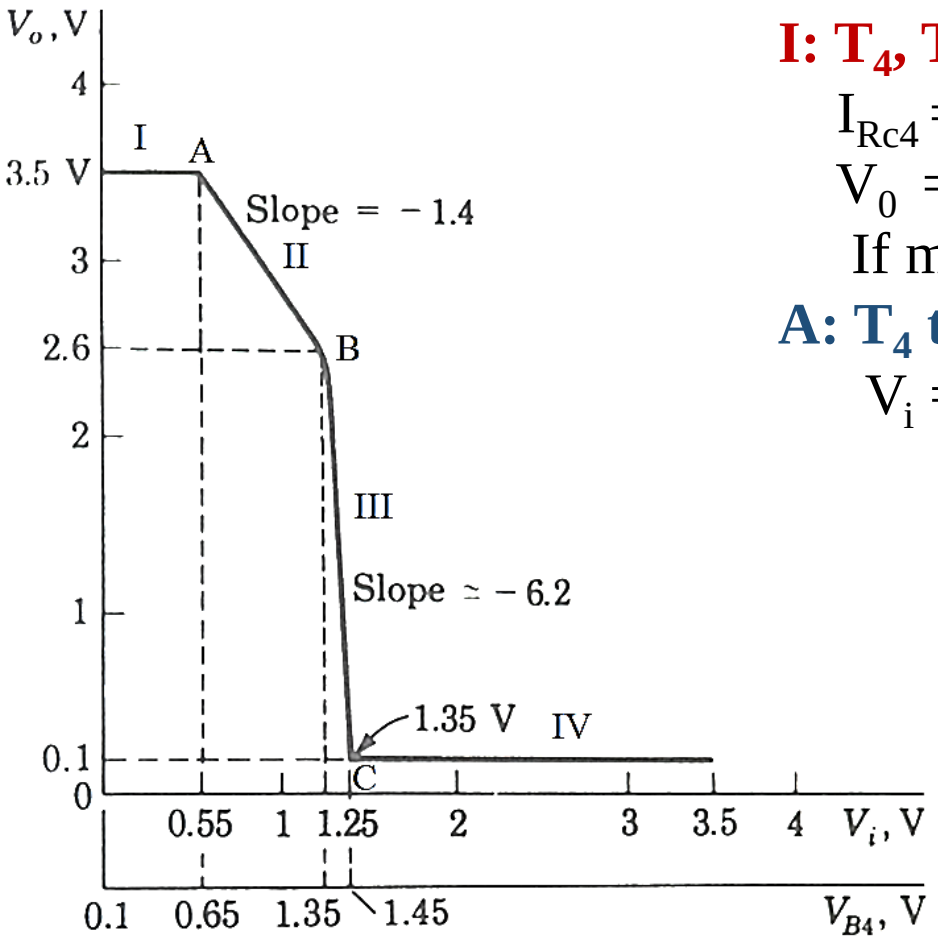

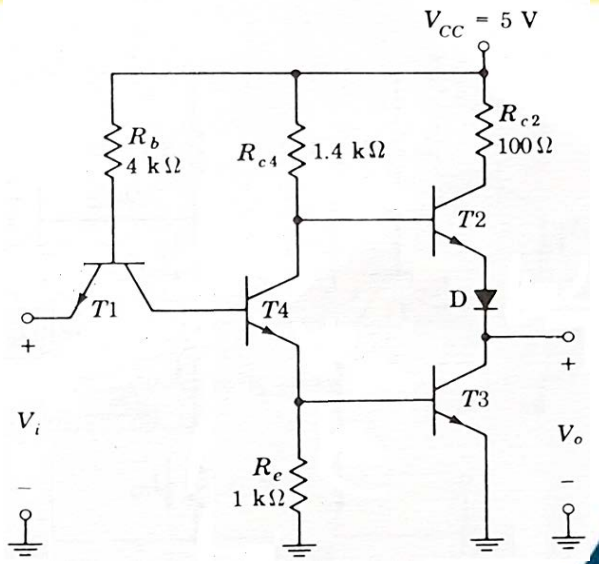

I: T_4, T_3 Cut-off. T_1 Sat., T_2 Active

$I_{Rc4} = I_{B2}$ negligible

$V_0 = 5 - 2x0.7 = 3.6V$

If more load, $V_0 = 5 - 2x0.75 = 3.5V$

A: T_4 turns on at $V_{BE4} = 0.65$ V

$V_i = 0.65 - V_{CE1(Sat)} = 0.55$ V

II: T_4 active. T_3 Cut-off. T_1 Sat., T_2 Active

$I_{RC4} \approx I_{C4}$ NOT negligible

$A_{V4} = -(R_{c4} / R_e) = -1.4$

$A_{V2} = 1$ (emitter follower)

B: T_3 turns on at $V_i = 0.7 + 0.65 - 0.1$

$V_o = 3.5 - (1.4 \times 0.65/1) = 2.6$ V

NPTEL

TTL: Transfer Characteristics

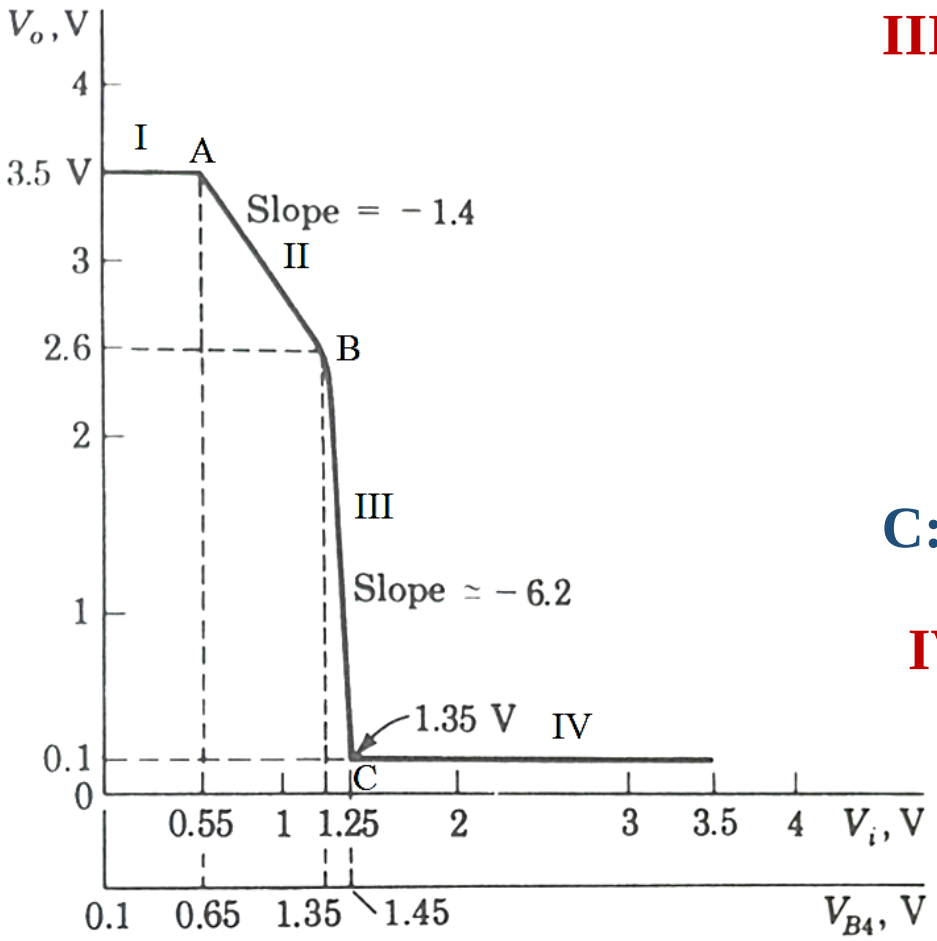

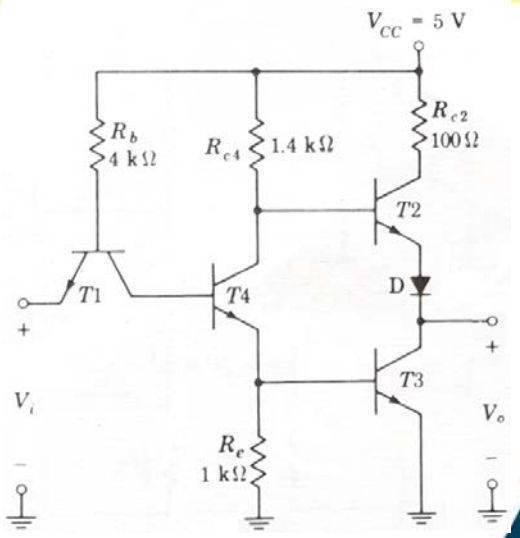

III: T_4, T_3 Active. T_1 Sat. T_2 Active to Off

$A_{V4} = -(R_{c4} / R_e \| r_d) = -2.8$

$A_{V3} = \Delta V_0 / \Delta V_{B3} = -(\beta_F R_{c3(eff.)} / r_d)$

$R_{c3(eff.)} = (r_{d(D)} + r_{d(T2)} + R_{c4})/\beta_F$

$A_{V3} = -(1.4 + 1 + 1) / 1 = -3.4$

$\Delta V_0 = A_{V4}\,\Delta V_{B4} + A_{V3}\,\Delta V_{B3}$

$A_V = A_{V4} + A_{V3} = -6.2$ [as $\Delta V_{B4} = \Delta V_{B3}$]

C: T_3 saturates at $V_i = 0.75 + 0.7 - 0.1$ V

IV: T_4, T_3 Sat. T_2 Cut-off. T_1 inverse

T_4, T_3 saturate at $V_i = 2 \times 0.75 - 0.1$ V

$V_0 = 0.1$V

NPTEL

SN7404 Datasheet

Texas Instruments (Revised 2004)

Parameter	Min.	Typical	Max.	Unit
V_{IH}	2			V
V_{IL}			0.8	V
I_{OH}			-0.4	mA
I_{OL}			16	mA
V_{OH}	2.4	3.4		V
V_{OL}		0.2	0.4	V
I_{IH}			40	µA
I_{IL}			-1.6	mA
t_{PLH}		12	22	ns
t_{PHL}		8	15	ns

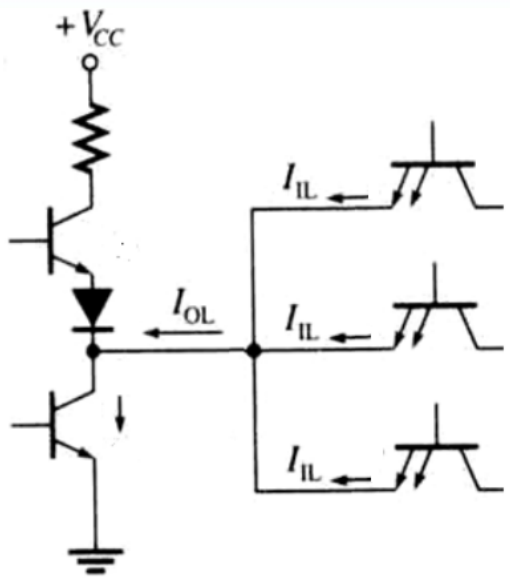

Fanout = Lower [$|I_{OH}/I_{IH}|$, [$|I_{OL}/I_{IL}|$]=10

$NM_L = V_{IL} - V_{OL} = 0.8 - 0.4 = 0.4V$

$NM_H = V_{OH} - V_{IH} = 2.4 - 2 = 0.4V$

$P_D = 10mW$

Note: Under specific test condition e.g. R_L=400Ω, C_L=15pF

NPTEL

TTL: Open Collector, Tri-state

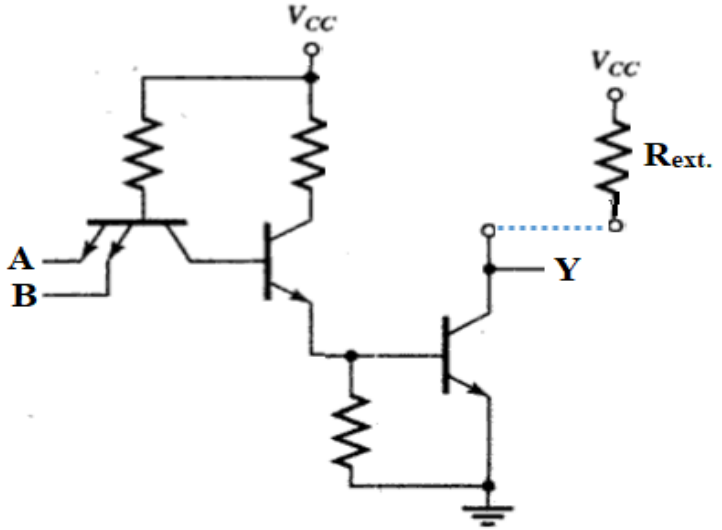

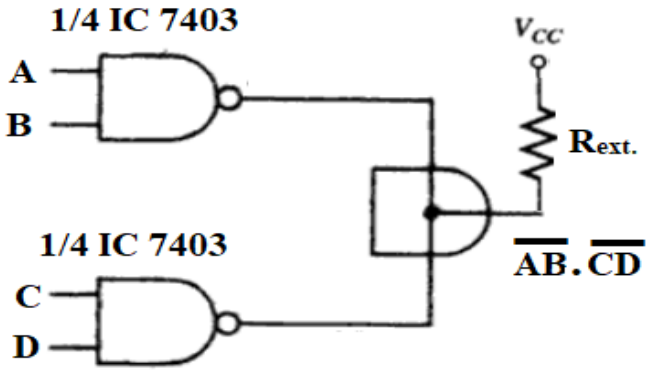

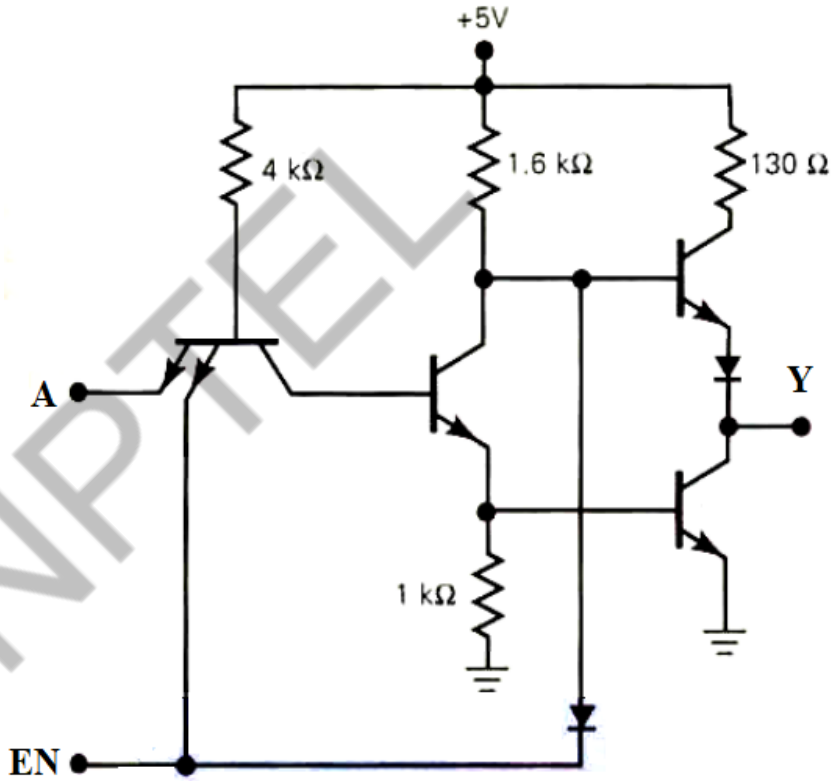

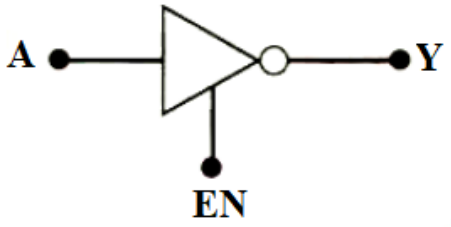

NPTEL

TTL Gates: NAND, NOR

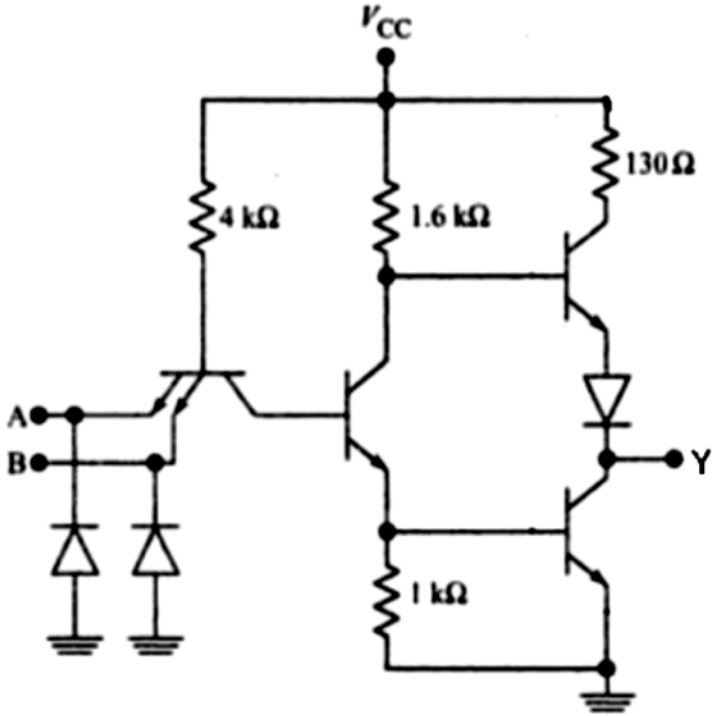

2-input NAND gate

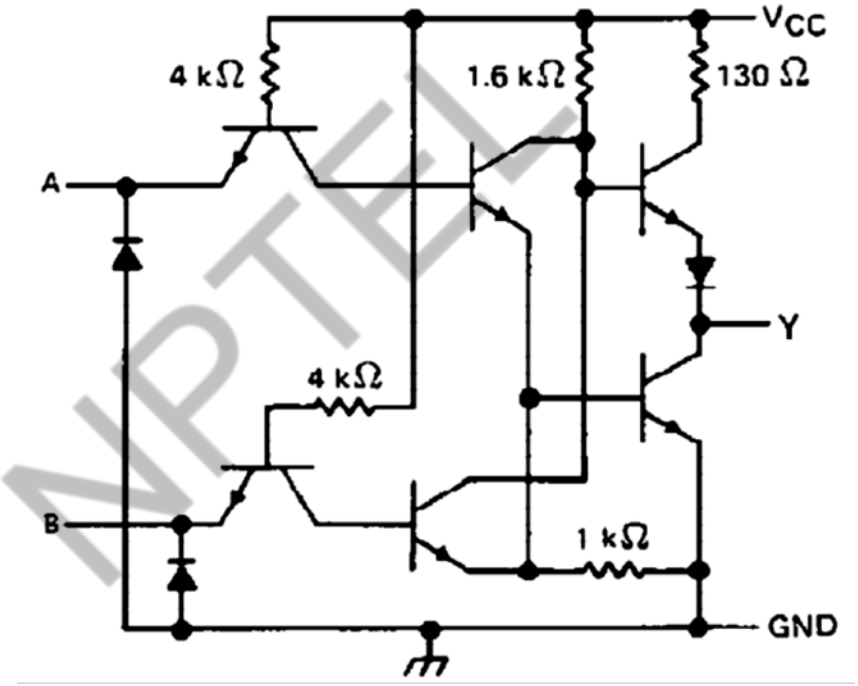

From TI SN7402 (2-input NOR) datasheet

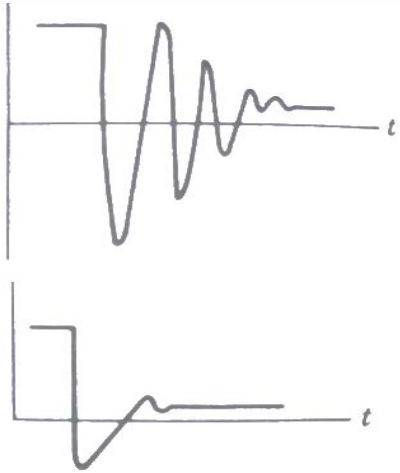

Input diodes supress ringing

NPTEL

Schottky TTL

Cut-in ≈ 0.35V
(range 0.2-0.5V)

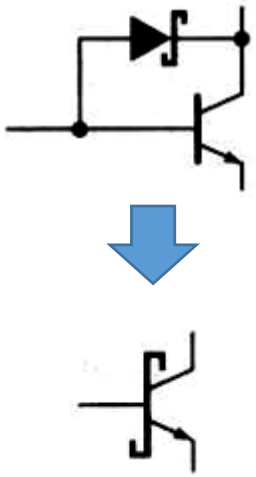

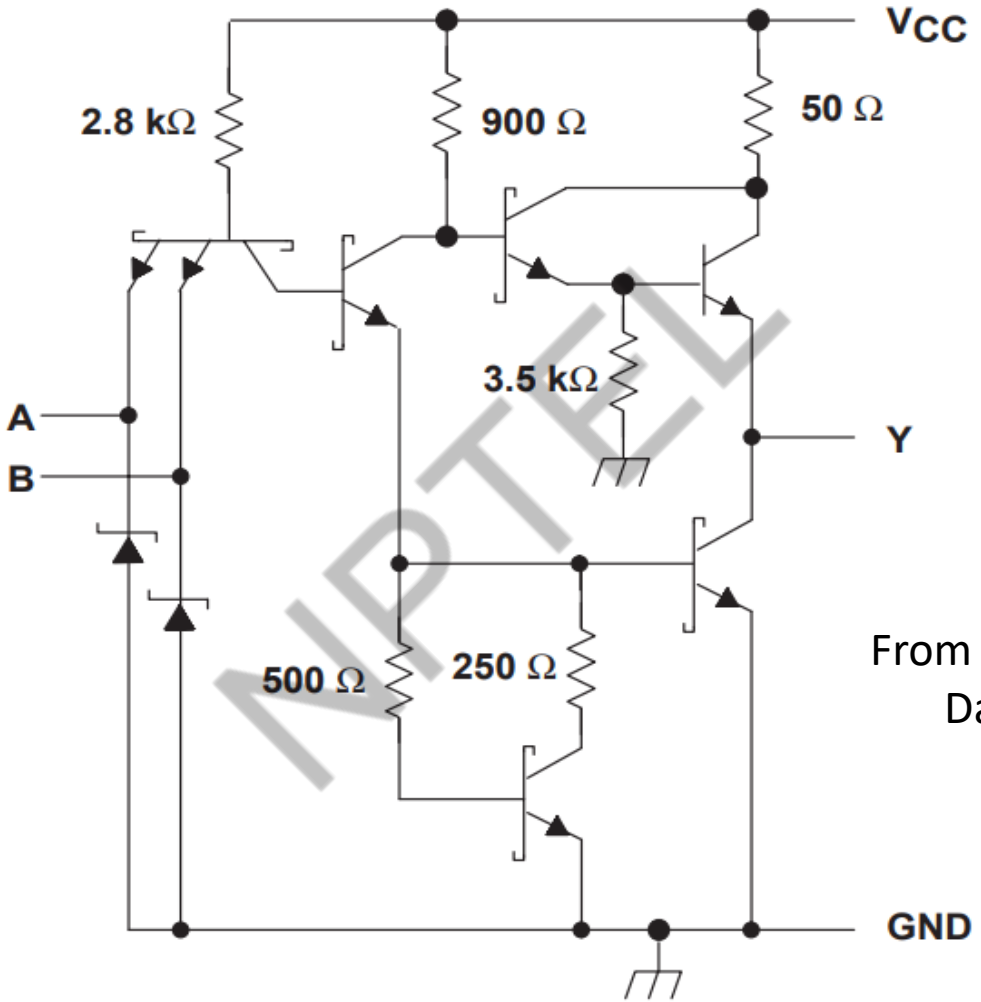

Qty.	Typ.	Max.	Unit
t_{PLH}	3	4.5	ns
t_{PHL}	3	5	ns

Under test condition
R_L=280Ω, C_L=15pF

From TI SN74S00 Datasheet

NPTEL

References

References:

- Herbert Taub, and Donald Schilling, Digital Integrated Electronics, McGraw Hill
- Grinich, V.H., and H.G. Jackson, Introduction to Integrated Circuits, McGraw-Hill
- Technical documents from http://www.ti.com accessed on Oct. 08, 2018

NPTEL

Conclusion

Conclusion:

- TTL Transfer Characteristics have 4 distinct zones depending on operating conditions of 4 transistors.
- TTL NAND gate is obtained from multi-emitter input while NOR gate is obtained from parallel connections of as many numbers of input and phase splitter.
- TTL Open Collector requires external pull-up resistor connected to power supply by which current can be varied. This config. makes wired-AND is possible.
- TTL Tristate configuration doesn't make any of the transistors at Totempole output ON when disabled.
- Schottky TTL uses Schottky transistors which fall short of saturation and increases switching speed.

NPTEL

FREE ONLINE EDUCATION

swayam

शिक्षित भारत, उन्नत भारत

NPTEL ONLINE CERTIFICATION COURSES

Thank you!

NPTEL

NPTEL ONLINE CERTIFICATION COURSES

Digital Electronic Circuits

Goutam Saha

Indian Institute of Technology Kharagpur

CMOS Logic

Lecture 05

NPTEL

CONCEPTS COVERED

Concepts Covered:

- NMOS Logic gate
- CMOS Logic gate and its characteristics
- CMOS Tristate and Open-drain
- CMOS – TTL Interface

NPTEL

NMOS Gate

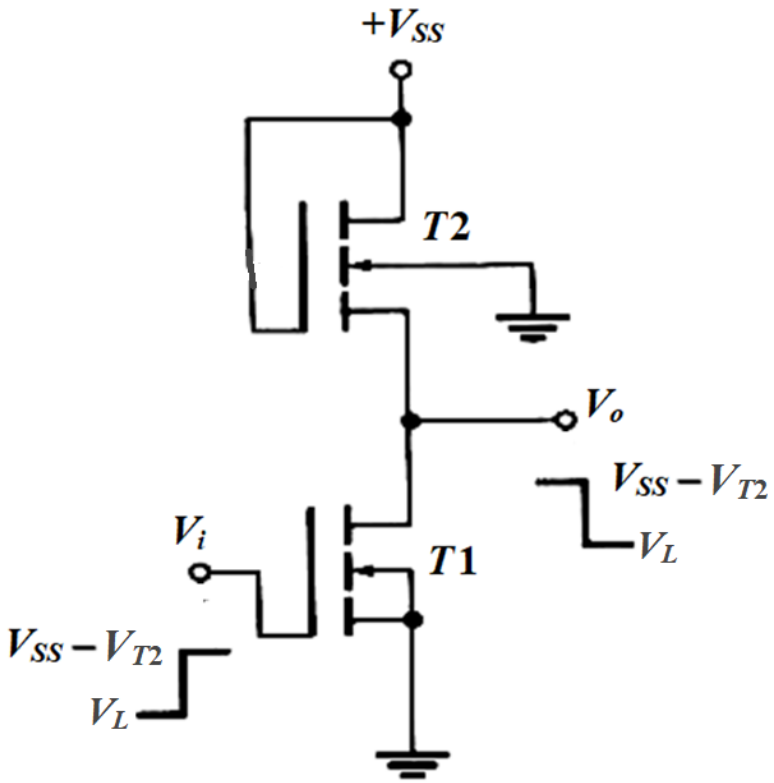

Inverter with NMOS as resistance

Pinch-off

$V_{DS} \geq V_{GS} - V_T$

Sat.: $I_D = k(V_{GS} - V_T)^2$

Lin.: $I_D = k[2(V_{GS} - V_T)V_{DS} - V_{DS}^2]$

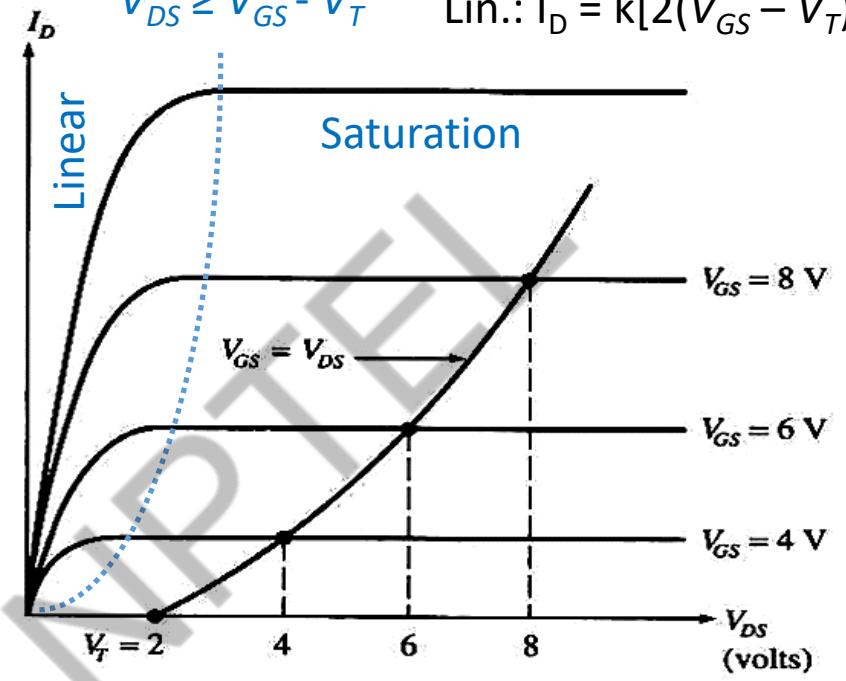

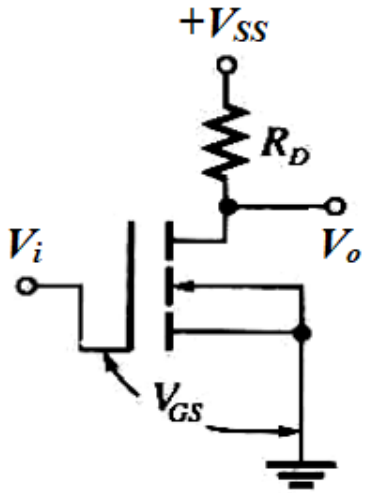

Saturation region:
Note the difference between TTL and MOS

NOR: T_{1A}, T_{1B} **in parallel**

NAND: T_{1A}, T_{1B} **in series**

NPTEL

CMOS Inverter

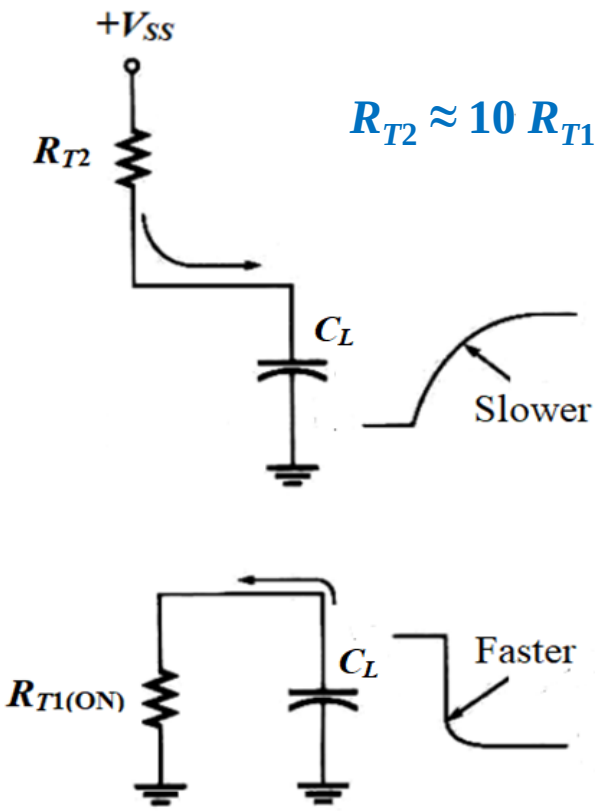

$R_{T2} \approx 10\ R_{T1}$

NMOS: Charging / discharging of C_L

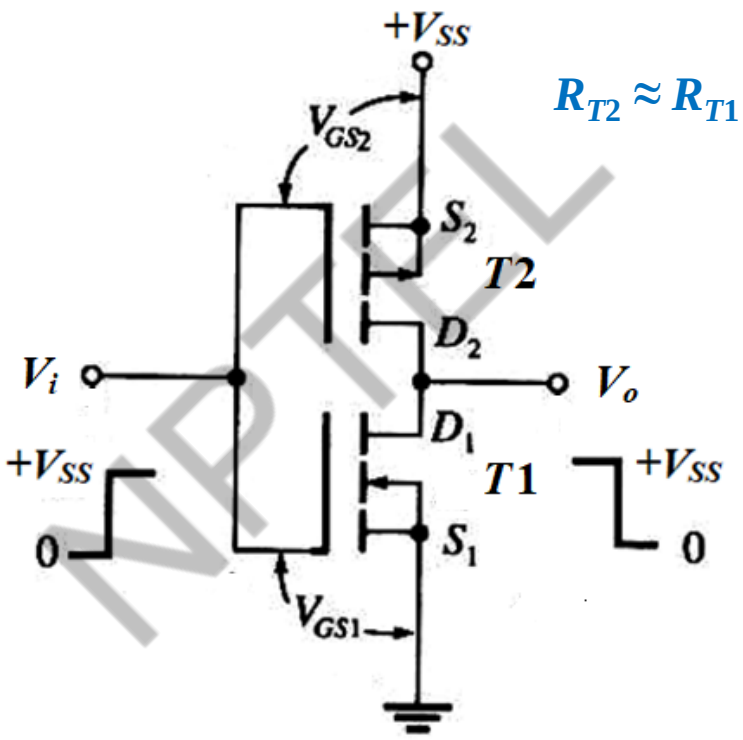

$R_{T2} \approx R_{T1}$

CMOS Inverter

Output resistance = 1 KΩ (for both H and L)

Input resistance = 10^{12} Ω

Input capacitance = 5 pF (shunt)

NPTEL

CMOS Transfer Characteristics

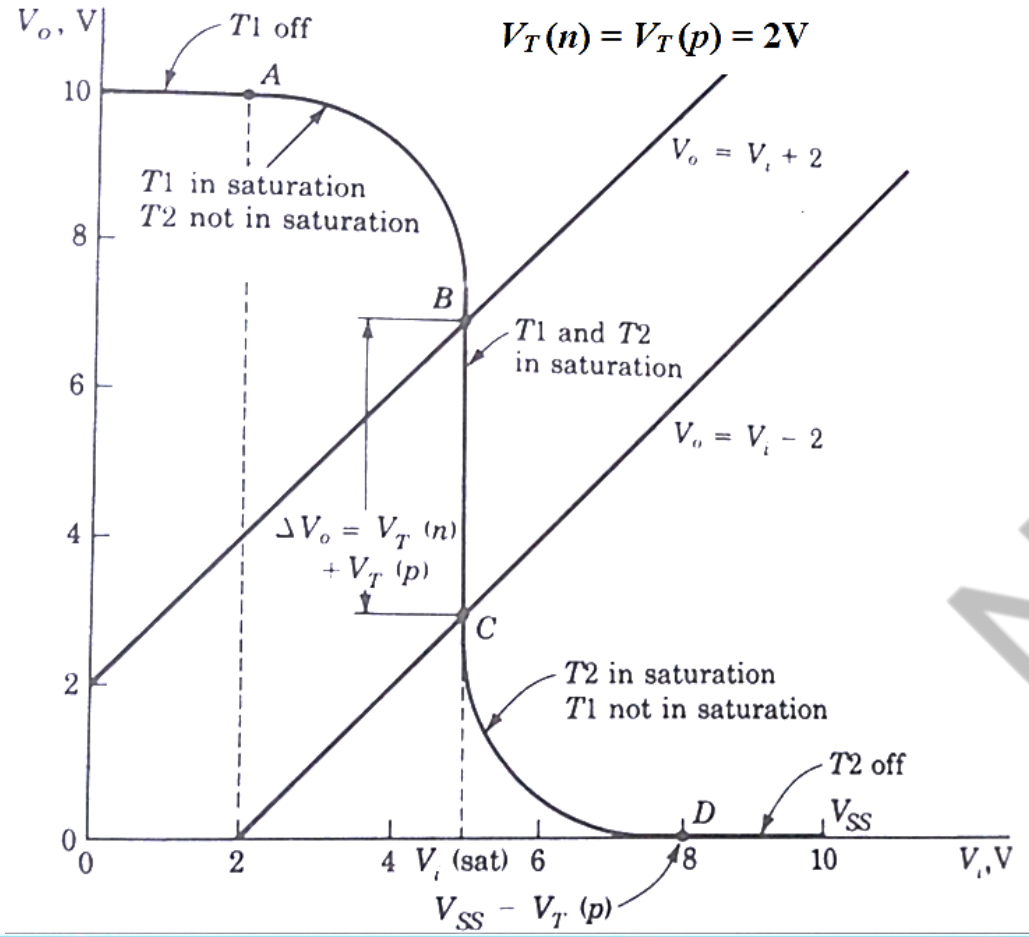

- $\boldsymbol{V_i \le V_T(n)}$ **:** T_1 OFF, T_2 ON, $V_o < V_{SS}$ ➡ $V_i \le 2V$
- $\boldsymbol{V_i \ge V_{SS} - V_T(p)}$ **:** T_2 OFF, T_1 ON, $V_o = 0V$ ➡ $V_i \ge 8V$
- T_1 saturated: $V_{DS1} \ge V_{GS1} - V_T(n)$
  i.e. $\boldsymbol{V_T(n) \le V_i \le V_o + V_T(n)}$ ➡ $V_o \ge V_i - 2$
- T_2 saturated: $V_{SD2} \ge V_{SG2} - V_T(p)$
  i.e. $\boldsymbol{V_o - V_T(p) \le V_i \le V_{SS} - V_T(p)}$ ➡ $V_o \le V_i + 2$
- Simultaneous saturation at unique $V_{i(\text{sat.})}$
  ➡ $V_{i(\text{sat.})} = 5V$ for $k_p = k_n$

NPTEL

CMOS Gate Parameters

Large range of
V_{SS} : 3 to 18 V and
T : -55^{0}C to 125^{0}C

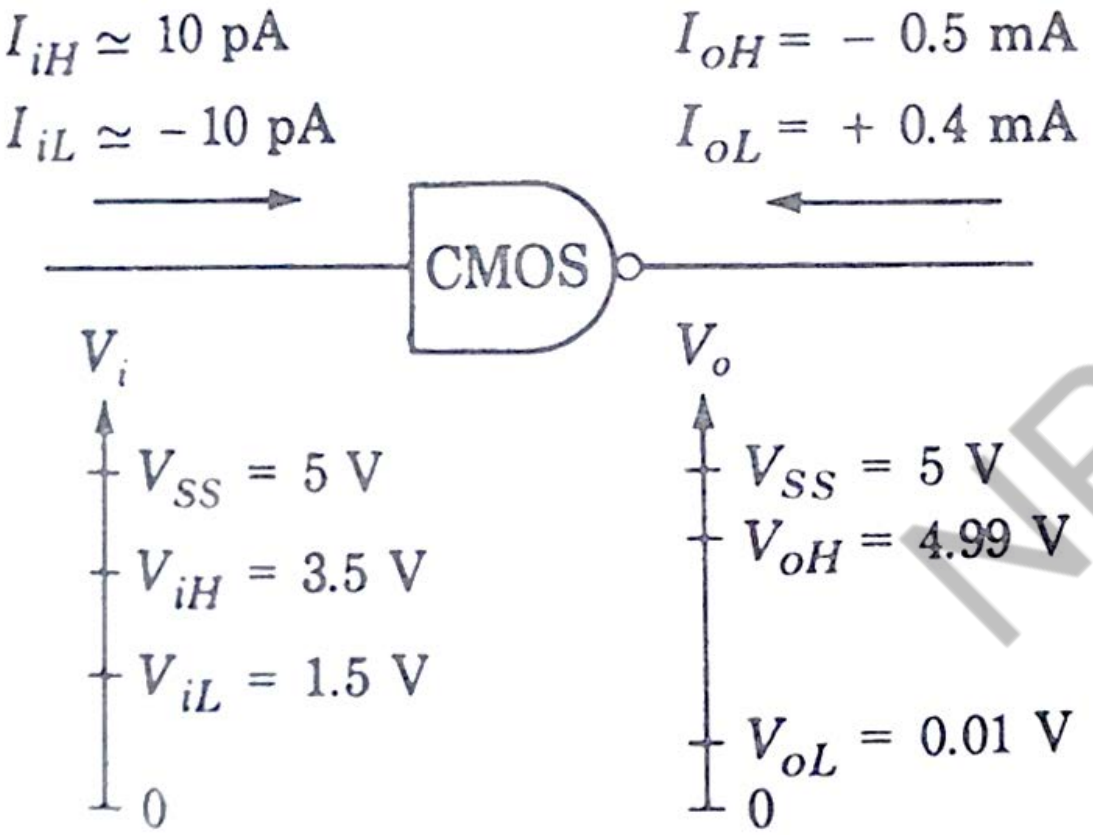

$NM_L = NM_H = 1.5V$

$t_{PHL} = t_{PLH} = 60$ ns (25 ns at $V_{SS} = 10V$)

Fanout ≈ 50 (Limited by t_P)

$P_{D\ (static)}$ ≈ 10nW

$P_{D\ (dynamic)}$ (charging / disch. of C_L)
$= C_L V_{SS}^2 f$
(1.25mW for
50pF, 5V, 1 MHz)

NPTEL

CMOS NAND and NOR Gates

Combinatorial Logic

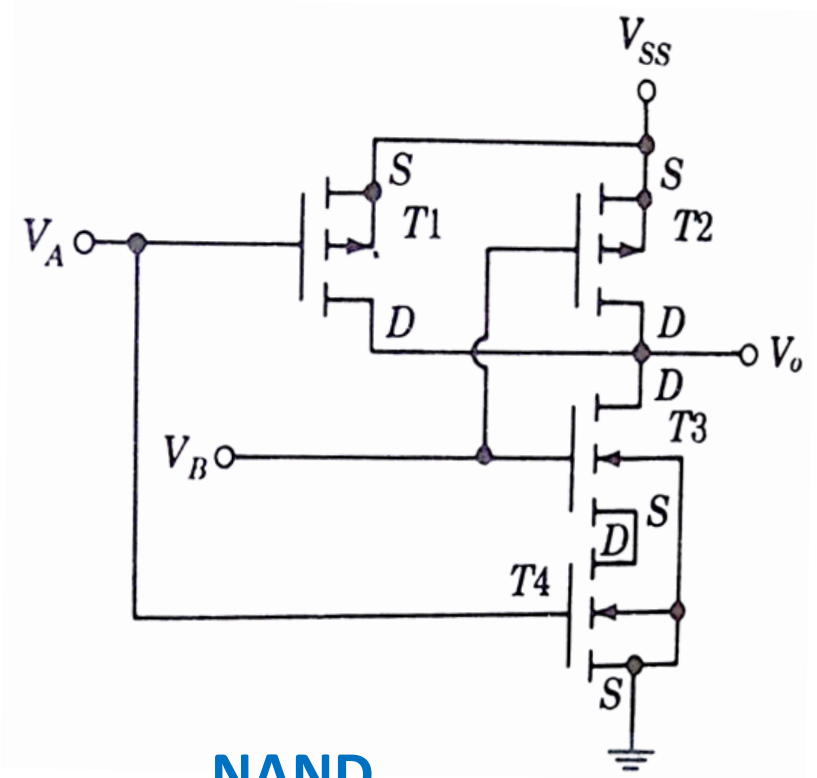

NAND

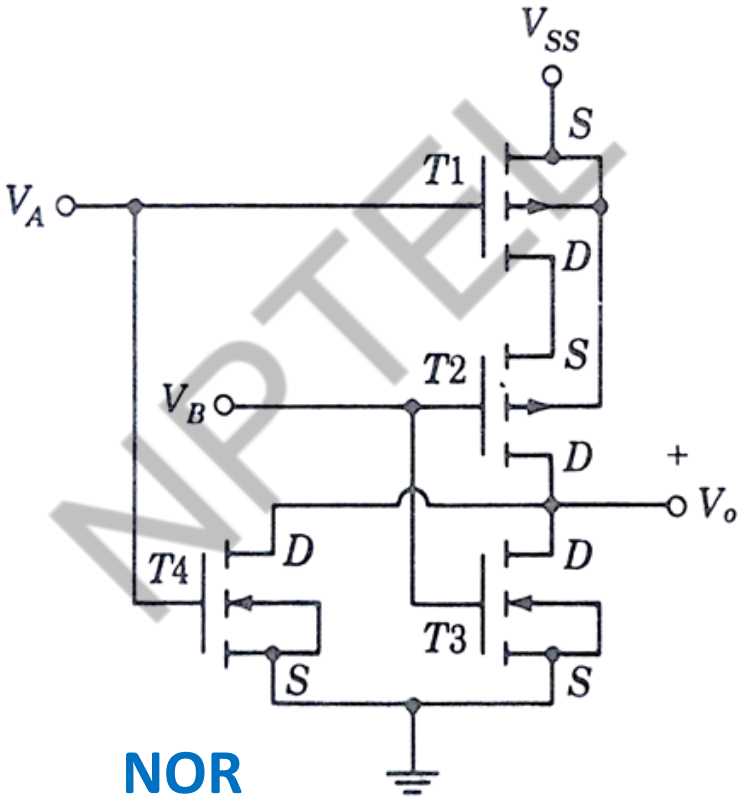

NOR

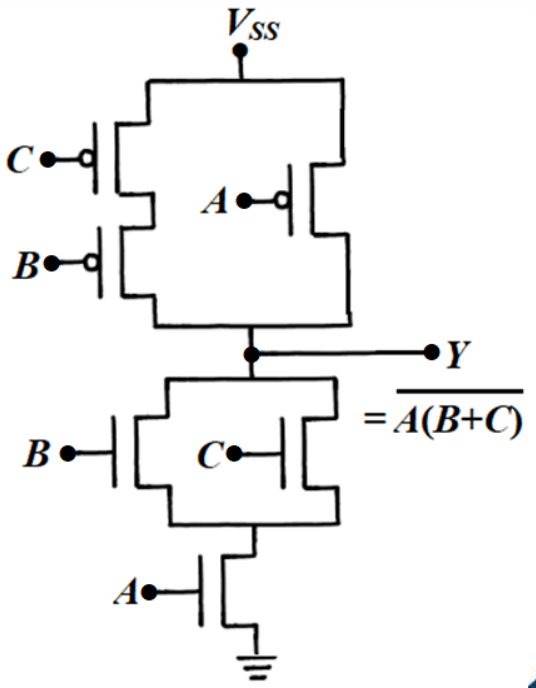

NPTEL

CMOS Tristate and Open-drain

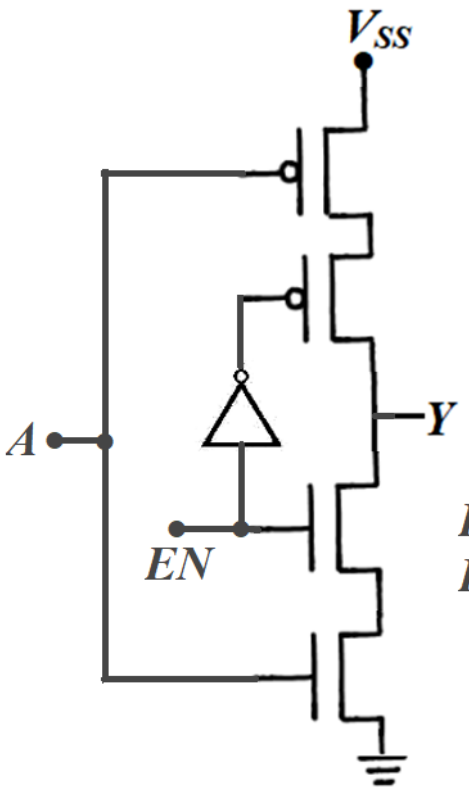

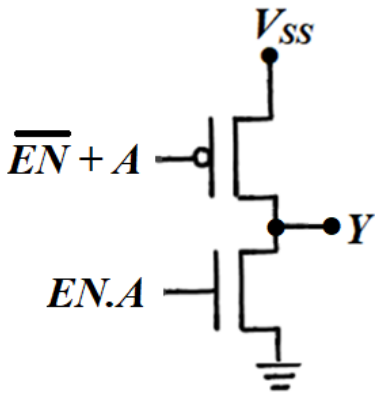

$EN = 1,\ Y = \overline{A}$

$EN = 0,\ Y = \text{High } Z$

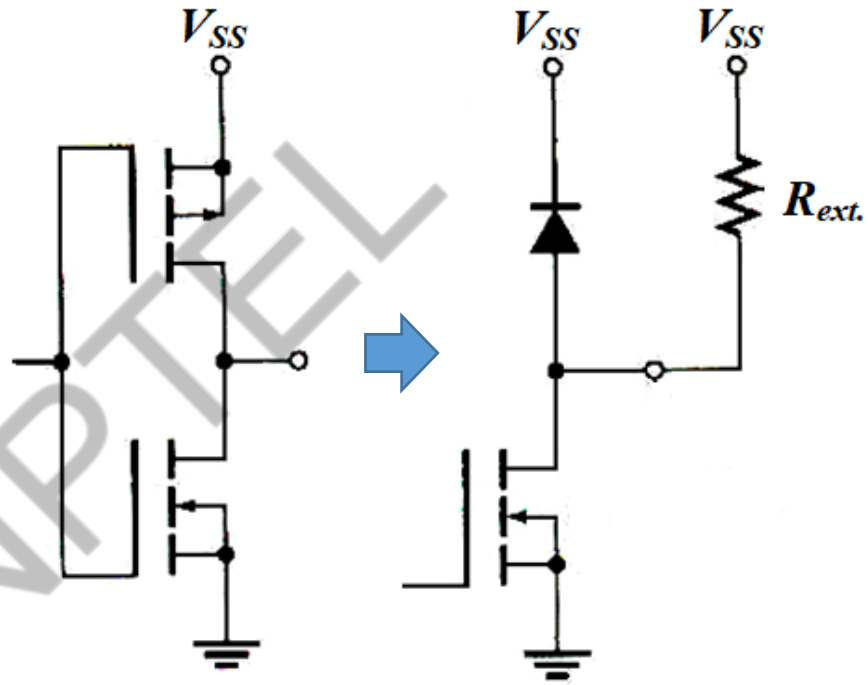

Open-drain with protective diode

Similar to open-collector: Provides wired-AND

NPTEL

CMOS – TTL Interface

Both: 5V Supply			
Parameter	CMOS	TTL	Unit
V_{IH}	3.5	2	V
V_{IL}	1.5	0.8	V
I_{OH}	-0.5	-0.4	mA
I_{OL}	0.4	16	mA
V_{OH}	4.99	2.4	V
V_{OL}	0.01	0.4	V
I_{IH}	10^{-6}	40	µA
I_{IL}	-10^{-6}	-1.6	mA

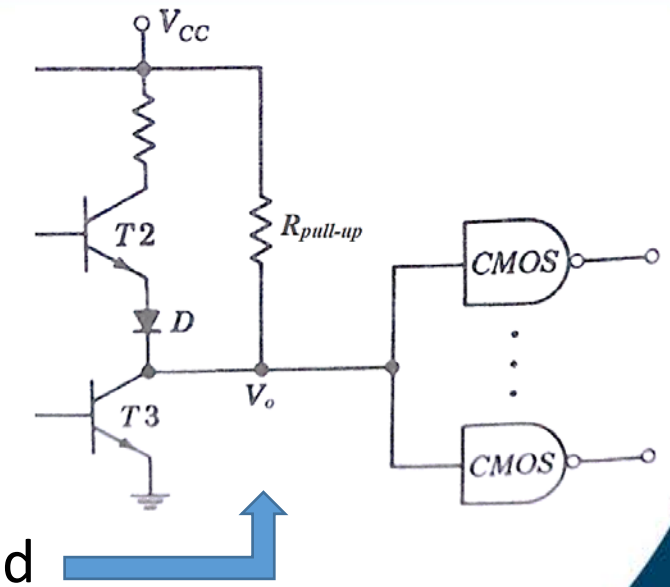

TTL driving CMOS

- No issue with current levels.
- Issue with $V_{OH(TTL)} < V_{IH(CMOS)}$
- Pull-up resistance (2 - 6 kΩ) used

CMOS driving TTL

- No issue with voltage levels.
- Issue with $|I_{OL(CMOS)}| < |I_{IL(TTL)}|$
- CMOS buffer used
  - dimension increased, ≈ 4mA

NPTEL

References

References:

- Herbert Taub, and Donald Schilling, Digital Integrated Electronics, McGraw Hill
- Technical documents from http://www.ti.com accessed on Oct. 08, 2018

NPTEL

Conclusion

Conclusion:

- NMOS inverter uses NMOS load resistance as it takes less space. CMOS inverter charges load capacitance quicker through PMOS (ON) that improves speed.
- CMOS inverter transfer characteristics has 5 zones depending on operating condition of two transistors.
- CMOS gate fanout is limited by propagation delay. Its dynamic power dissipation at high freq. is comparable to TTL. Else, CMOS takes less space and less power.
- CMOS gate can have Tristate and Open-drain config.
- CMOS and TTL gates are incompatible on few counts for which appropriate interface is used.

NPTEL

FREE ONLINE EDUCATION

swayam

शिक्षित भारत, उन्नत भारत

NPTEL ONLINE CERTIFICATION COURSES

Thank you!

NPTEL